Encon®
SAFETY PRODUCTS
1-800-283-6266
phone: (713) 466-1449
email: customerservice@enconsafety.com

COMBINATION SHOWER & EYEWASH W/ YELLO-BOWL® & 30 GPM SHOWER HEAD

PART NUMBER: 01050210

SPECIFICATION:

Third party certified to ANSI Z358.1, the combination shower and eyewash shall deliver 30 gpm (113.56 lpm) @ 30/70 psi (206.8/482.6 kPa) of flowing pressure from the shower head and 3.2 gpm (12.1 lpm) @ 30/70 psi (206.8/482.6 kPa) of flowing pressure from the eyewash. Unit shall provide a non-injurious stream of water for 15 minutes or longer. Combination unit shall be supplied with chrome plated (CP) bronze single motion activation stay open ball valves with CP balls. Valve sizes: shower 1", eyewash ½". Unit shall include SS actuators with actuation graphics, schedule 80 hot dip galvanized steel piping and 1¼" supply/drain connection with flanged floor mounting plate for free-standing installation. Shower head shall be supplied with self-adjusting 30 gpm (113.56 lpm) regulator. Eyewash to be supplied with self-adjusting 3.2 gpm (12.1 lpm) regulator to assure a constant and even dual stream flow pattern under 30/70 psi (206.8/482.6 kPa) hydraulic conditions. Shower head to be manufactured of UV resistant high visibility yellow ABS plastic. Shower head to deliver a minimum of 20" (50.8cm) diameter pattern to the target area 60" (152.4cm) above standing level. Eyewash heads with hinged covers to be manufactured of UV resistant ABS plastic mounted in a high visibility ABS Yello-Bowl®. Hinged covers are provided to inhibit dust and/or contamination when not in use. Combination units that provide improper flow pattern or contain deteriorating screens/filters are not acceptable.

Encon Safety Products Model 01050210 includes 30gpm combination shower with eyewash unit and Corrosion-resistant polyurethane enamel coating.

***Note:** Where hazardous materials that are injurious to the skin are used, a proper eyewash or eye/facewash installation with an emergency shower should be considered.

MATERIALS OF CONSTRUCTION:

PIPING: Schedule 80 hot dip galvanized steel.
VALVES: Chrome plated bronze stay open ball valves with chrome plated balls, stainless steel valve stems, stainless steel push plate with actuation graphic (eyewash) and stainless steel pull rod assembly with actuation graphic (shower).
Valve sizes: shower 1", eyewash ½".
SHOWER HEAD: Yellow ABS plastic shower head.
EYEWASH HEAD: ABS plastic dual stream heads with ABS plastic float off covers secured with stainless steel bead chains.
COATING : Corrosion-resistant polyurethane enamel coating, ABS yellow, high visibility.
BOWL: High visibility ABS plastic Yello-Bowl®.
REGULATOR: Self adjusting 30 gpm (113.56 lpm) shower and 3.2 gpm (12.1 lpm) eyewash regulators.
SUPPLY: 1 ¼" NPT
WASTE: 1 ¼" NPT
WEIGHT: 59 lbs (26.76 kgs)

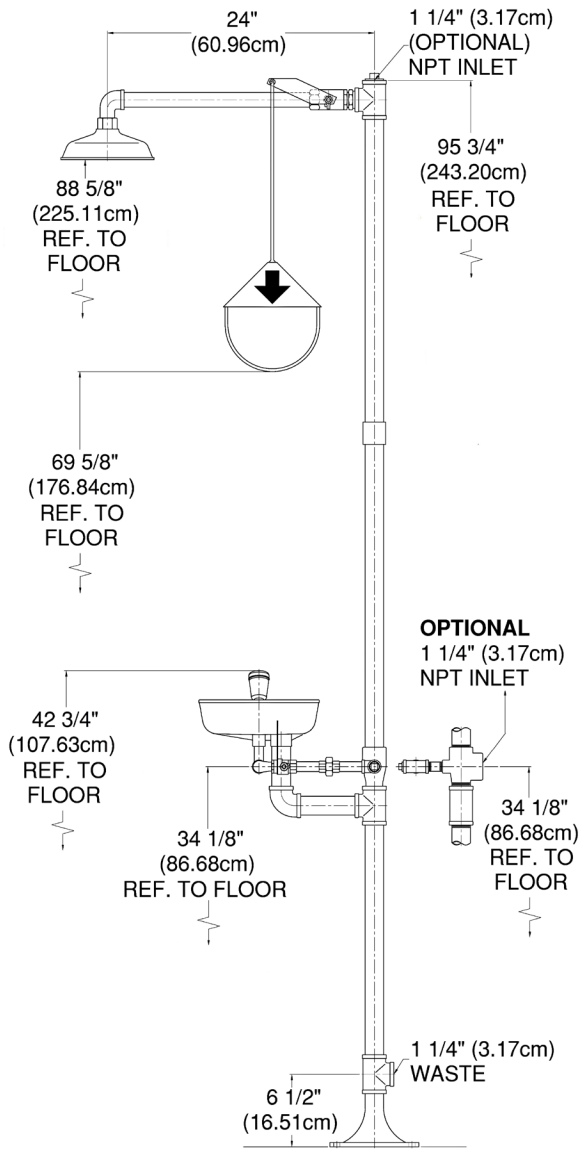

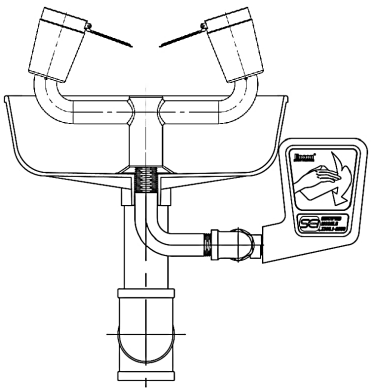

FRONT VIEW
(EYEWASH)

© 2025 Encon Safety Products, Inc. **Visit our website: www.enconsafety.com** **ANSI CERTIFIED**